Kühl INSPIRA P1

BLDC Pedestal Fan

Kühl®
Stylish Smartfans
Above all.

BLDC FAN | SAVES ELECTRICITY | LOW NOISE | HIGH AIRFLOW

2 YEARS WARRANTY

August 2023

User Manual

Welcome
to Kühl

Dear Customer,

Thank you for choosing **Kühl Stylish Fans!** It is indeed a wise decision as **Kühl Stylish Fans** are based on the New Technology named BLDC that offers energy efficient and low noise operation. This feature not only helps to keep the room cool but also keeps the electricity bill in check. The fans operate at a high speed and without noise. We believe in customer satisfaction as each **Kühl Stylish Fan** is delivered to you after going through an extensive and complete series of testing procedures that examine every area of its operation, effectiveness, and efficiency under various working situations.

Kühl Stylish Fans are here with everything you need from a fan and much more to give you all-round performance. With 1/3'° energy consumption, it is a pioneer in energy efficiency and brings you world class comfort. It's time to say goodbye to high electricity bills and be a part of the smart future.

Thank you!

Kühl Stylish Fans

TABLE OF CONTENTS

1. Introduction 1

2. Features of Kuhl Inspira P1 BLDC Pedestal Fan 1

3. Items in the Box 2

4. Know your Remote Control Device 3

5. Power Saving & Energy Efficient Guide 4

6. Cost Saving Guide 4

7. Mounting Recommendations & Maintenance 5

8. Safety Guidelines 5

9. Assembly Instructions 6-14

10. How to operate Kuhl Inspira P1 BLDC Pedestal Fan 14

11. How to Operate Remote Control Device 15-16

Introduction

Style has never been defined in a better way than the Kühl Inspira Series Fans which not only enhances the style quotient but also makes it more awe-inspiring than ever. Designed to make your space more aesthetically pleasing and stylish, they are designed with a classy combination of stylish finish and new-edge features. Despite their stylish appearance, Kühl Inspira Fans work on 28-watt power as against heavy 75-W Pedestal fans. Kühl Inspira is not just functionally powerful but also beautiful, making them a must to enhance the aesthetic appeal of your home.

Features of your Kühl Inspira P1 BLDC Pedestal Fan

1. **BLDC Technology for Energy Saving:** Kühl Stylish Fans offer better speed versus torque characteristics. It ensures high dynamic response and efficiency. Thanks to its lack of electrical and friction losses, it offers long operating life and ensures one more step towards building a sustainable future.

2. **Highest Air Delivery:** Energy efficient operation with around 28 W Power, 400 mm Sweep, & high RPM Speed to fill every corner of your place with fresh air as per your need. Its higher air force ensures unmatched comfort in every corner of the place.

3. **Low Noise:** A low noise operation without compromising speed limit is one of the most desired features of Kuhl Stylish Fans. They operate at low speeds while providing high air flow with low turbulence and minimal wind noise.

4. **Remote Operated:** Kuhl Inspira P1 Pedestal BLDC Fan is remote operated, conveniently adjust the fan speed, set timer, swing, or sleep mode.

5. **Height Adjustment:** Kühl Inspira P1 lets you adjust the fan height according to your convenience. You can raise or lower the fan height.

6. **Oscillation:** Kühl Inspira P1 swivels from side to side to spread air in each and every corner of the space.

7. **Tilt Mechanism:** With the help of tilt mechanism you can adjust the fan up or down to fixate the desired setting.

8. **Attractive Design:** Stylish enough to enhance the look of your place, Kuhl Stylish Fans feature decorative trims and a sleek surface that become the centre of attention in any space.

SPECIFICATION	Kühl Inspira P1 BLDC Pedestal Fan
Power (Watt)	28
Sweep (mm)	400
Air Delivery	77
Speed in RPM at 5th position	1200

Items in the box

Base	1 N	
Pole Assembly	2 N	
Motor Assembly	1 N	
Blade	1 N	
Front and Rear Gaurd	1 N	
Remote	2 N	
Pencil Cell AA	2 N	

Know your Control Device

1. **SPEED SETTINGS:** Speed varies for five different levels, wherein S1 is the lowest fan speed and S5 is the highest. Press as per your requirement.

2. **SLEEP MODE:** Auto speed control for uninterrupted comfortable sleep. Select this setting before going to bed, and the speed will automatically drop to the minimum pace as you specify.

3. **BUILT-IN TIMER:** You can use timer settings for 1 hour, 4 hours, & 8 hours accordingly.

4. **BOOST MODE:** Press this button to accelerate the fan past its maximum speed directly when it's too hot.

5. **SWING MODE:** Press this button to oscillate the fan from side to side.

Power Saving & Energy Efficient Guide

Kühl Stylish Fans come with revolutionary and super energy-efficient BLDC motor technology that consumes less energy. Our fans consume only 1/3rd of the power consumed by ordinary fans. Kühl Stylish Fans run on just 28 Watt at full speed whereas ordinary Pedestal fans run at 75 W.

Cost Saving Guide

	Ordinary Pedestal Fans	Kühl Inspira P1 Pedestal Fan
Assumed usage of fan per day (hours)	16 h	16 h
Power consumption*	75 W	28 W
Power consumption – KWh Units per day	1.2 kWh	0.44 kWh
Electricity bill per day @ Rs 7/unit	Rs 8.4	Rs 3.08
Electricity bill per annum	Rs 3066	Rs 1124
Savings per annum	-	Rs 1942
Cost saving	-	63%

Ordinary Pedestal fan runs between the range of 50-100 W.

Safety Guidelines

Read the safety guidelines carefully to understand the installation, use, and maintenance.

1. Never place any part of the packaging within the reach of children/differently abled.
2. Avoid using moist or damp hands while switching on/off the appliance.
3. Before cleaning and doing other maintenance procedures, be sure to turn off the fan's power supply.
4. To prevent mishaps, it is advised to inspect the suspension system of the ceiling fan every six months to ensure that the fasteners are properly tight.

Assembly Instructions Kuhl Inspira P1 BLDC Pedestal Fan

Step 1. Assemble the Pole Assembly onto Base with help of 4 screws provided on Base.

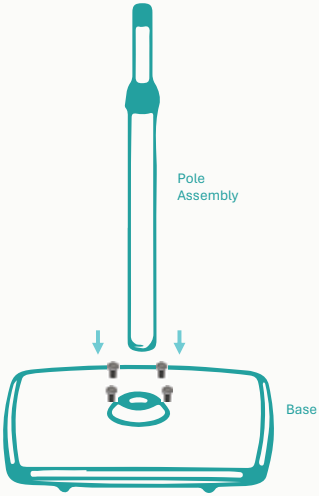

Step 2. Insert the Motor & Panel Assembly onto Pole Assembly and tighten with Knob

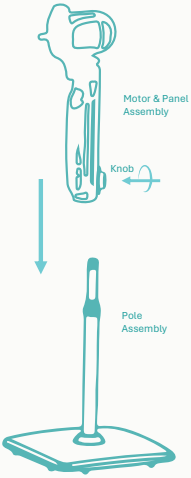

Step 3. Take out the Guard Nut from Motor Assembly, assemble the Rear Guard onto Motor Assembly, and re-tighten the Guard Nut

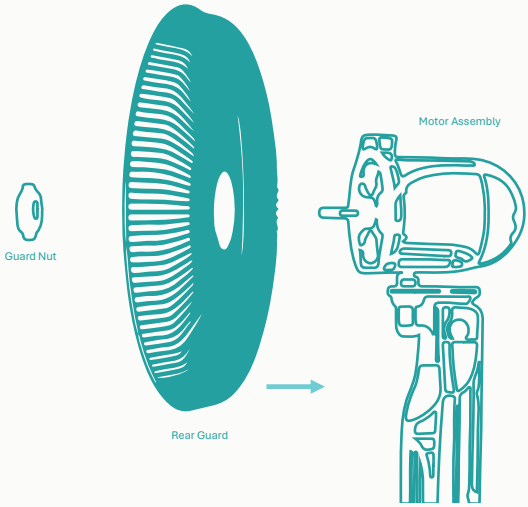

Step 4. Take out the Blade Nut from Motor Shaft, then assemble the Blade onto Motor Shaft. Take care the slots in Blade Hub insert onto the Pin on Motor Shaft. Finally re-tighten the Blade Nut.

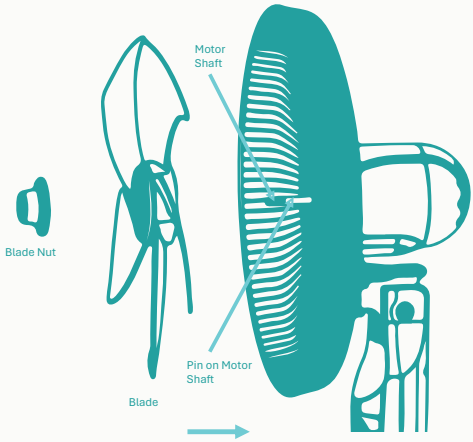

Step 5. Insert The Rubber Ring onto the Front Guard tightly

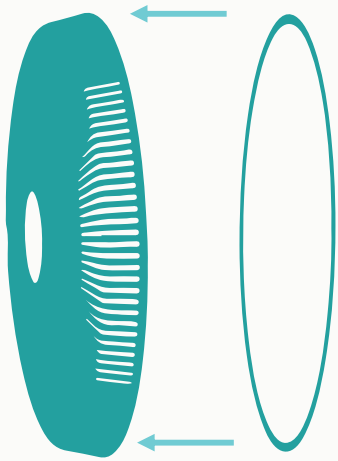

Step 6. Assemble the Front Guard onto Rear Guard by stretching and overlapping the Rubber Ring over Rear Guard

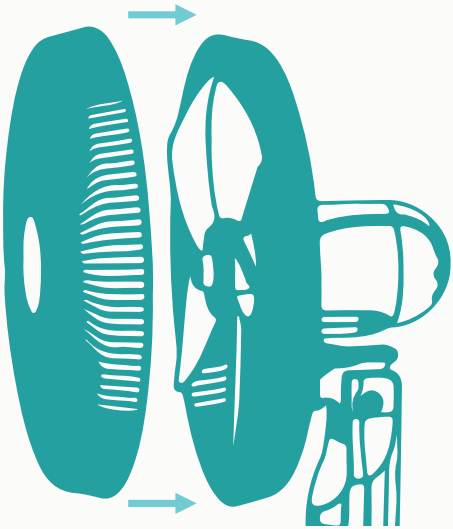

Step 7. Assembled Pedestal Fan

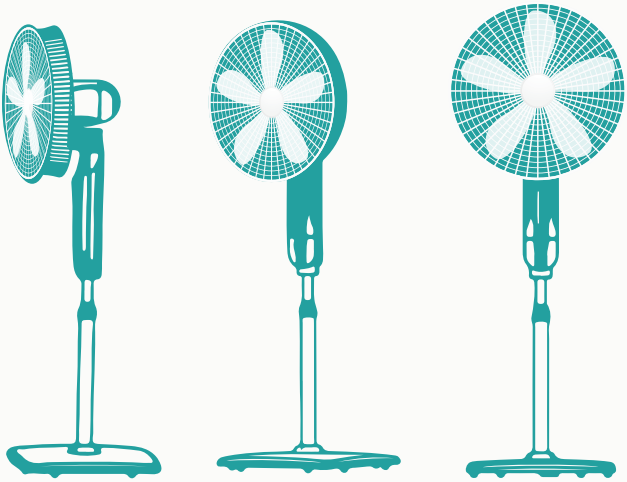

How to operate Remote Control Device

Get the Remote ready

- Insert 2 AA Batteries into the Remote Unit's slot provided at the back.
- Switch ON the fan from switch board to operate it with Remote as explained hereafter

Power ON/OFF Button

- Press power button on remote to start BLDC Fan
- Beep sound will indicate that it is switched ON.
- Press power button again to switch off / on the BLDC Fan.
- BLDC fan always re-starts at last Switch OFF speed.
- In case there is a power failure, the fan will automatically restart at previous speed
- If you want to switch off the fan during power failure, you must switch it off from the main board switch in wall, as remote is not operational without power.
- It is recommended to Switch off the fan from wall mounted switch when going out of home

Speed Buttons

- Kühl Inspira P1 BLDC Pedestal Fan comes with five different speed settings. You can control the speed, with the help of the (-) $ (+) buttons. For instance, to decrease the speed press (-) and vice-versa

Kühl®

Stylish Smartfans

Above all.

CONTACT US AT:

E-6,7 & 8, Sector-59, Noida, U.P.-201 309, India. Call: 92-789-12345
E-mail: service@kuhl.in or visit us at www.kuhl.in